Project : MT6580

Pre-layout_SCH TOP LEVEL

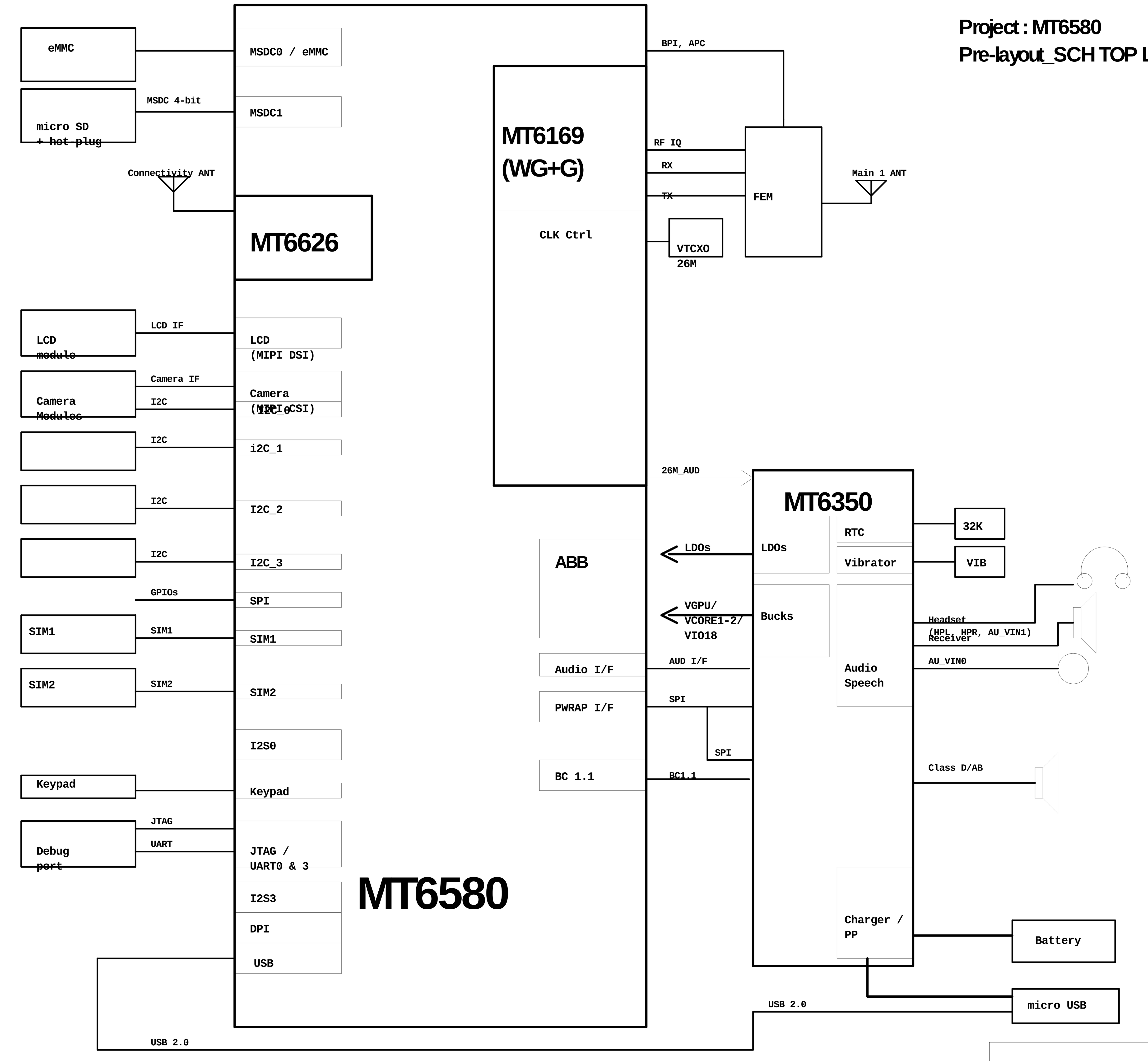

Title	01_Block Diagram
Size A1	MTK Confidential
Date: Wednesday, November 19, 2014	Sheet 1 of 22

I2C	Function	I2C Spec.	Budgeted Timing	I2C Slave Address (7-bit mode)
I2C-0				
I2C-1				
I2C-2				

Note : I2C Spec. : Standard mode (100 kbps) and Fast mode (400 kbps), Fast mode Plus (1 Mbps) and High-speed mode (3.4 Mbps)

Feature set:
Rear Camera
Front Camera
CTP
LCM gate driver
M Sensor
ALS/PS sensor
Gyro sensor

Title	02_I2C_ID_Overview	
Size A1	MTK Confidential	
Date: Wednesday, November 19, 2014	Sheet 2	of 22

Date	Category	Item	SW Modification

Title	03_Change_Notice
Size A1	MTK Confidential
Date:	Wednesday, November 19, 2014 Sheet 3 of 22

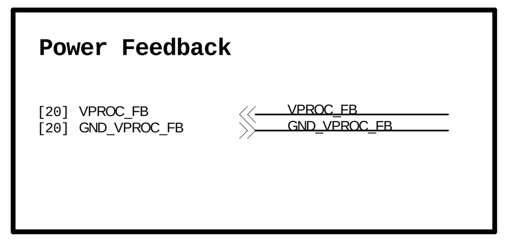

Schematic design notice of "10_BB_POWER" page.

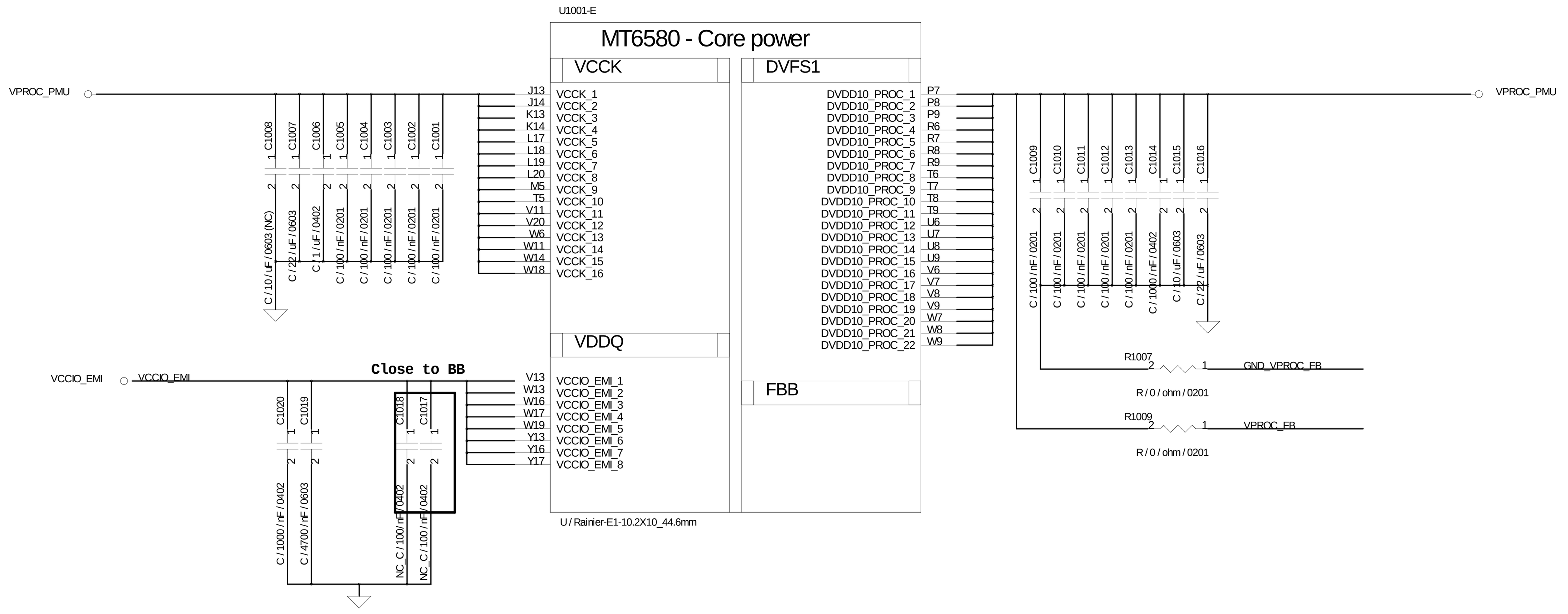

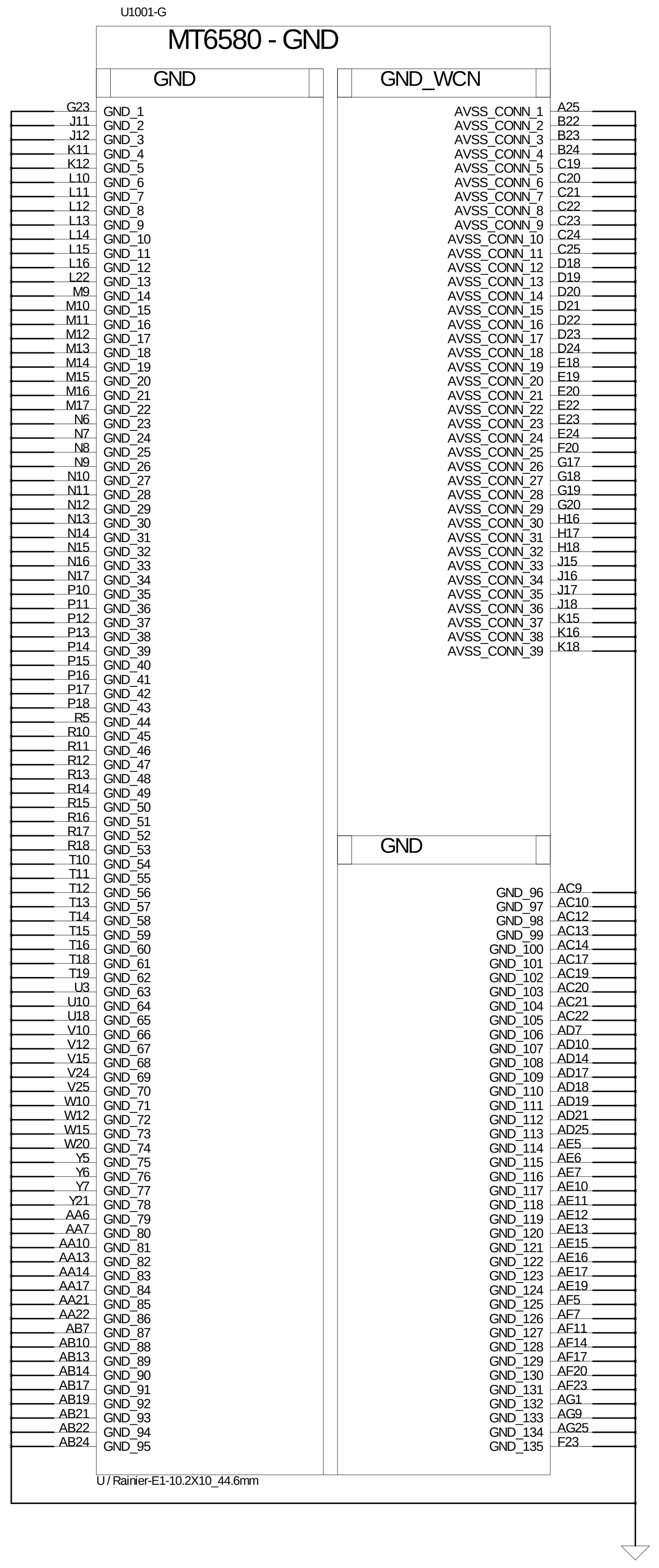


```
MT6570: W/O R1001,R1008,R1009,U2302
        W/  R1003,R1007,R1006(1-2)
MT6580: W/O R1003,R1007
        W/  R1001,R1006(2-3),R1008,R1009
```

Title	10_BB_POWER_1
Size A1	MTK Confidential
Date: Wednesday, November 19, 2014	Sheet 4 of 22

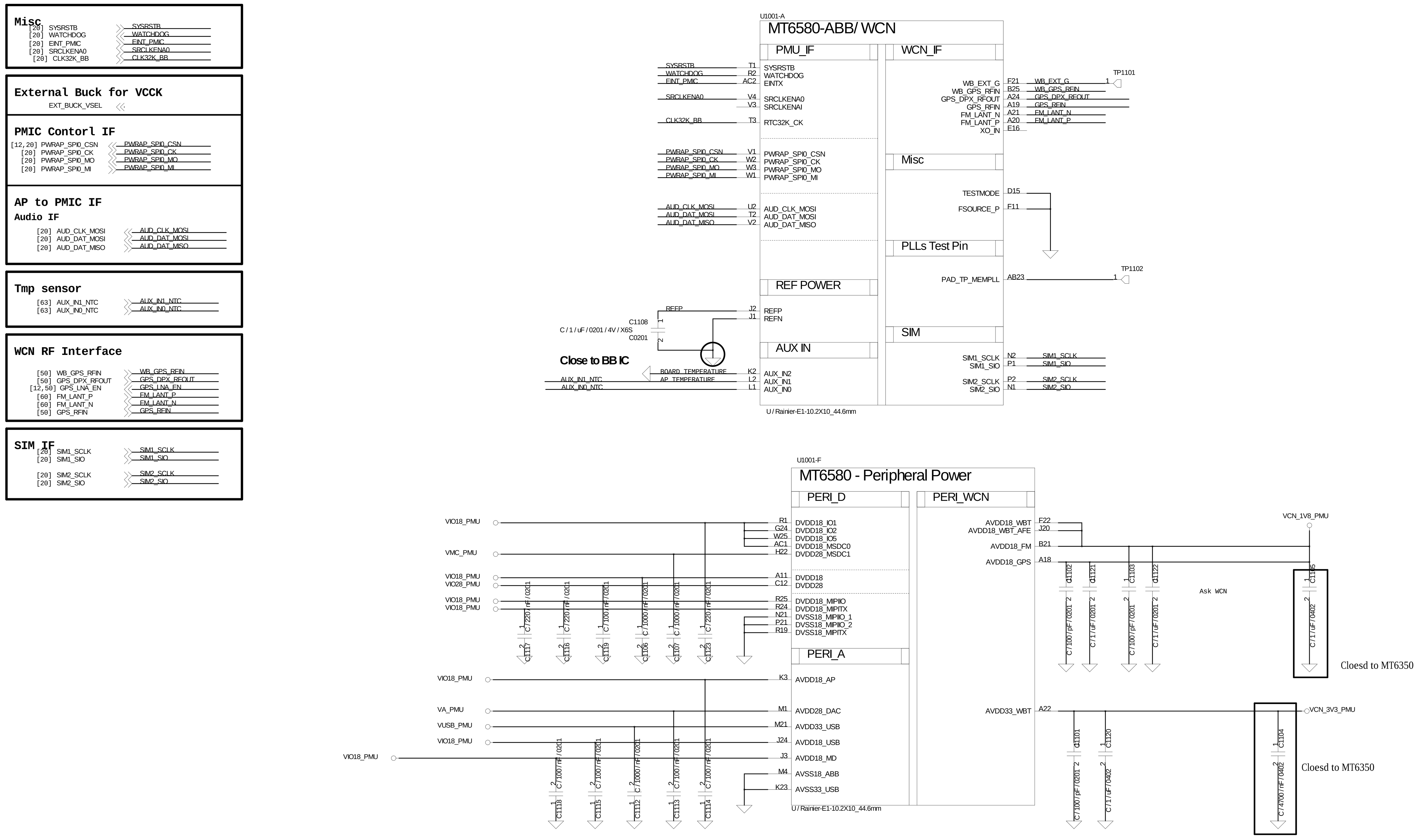

AVDD28_DAC change power source by "VA_PMU".

Schematic design notice of "11_BB_11" page.

Note 12-1:

Note 12-2:

Note 12-3:

Note 12-4:

Title	11_BB_1
Size A1	MTK Confidential
Date: Wednesday, November 19, 2014	Sheet 5 of 22

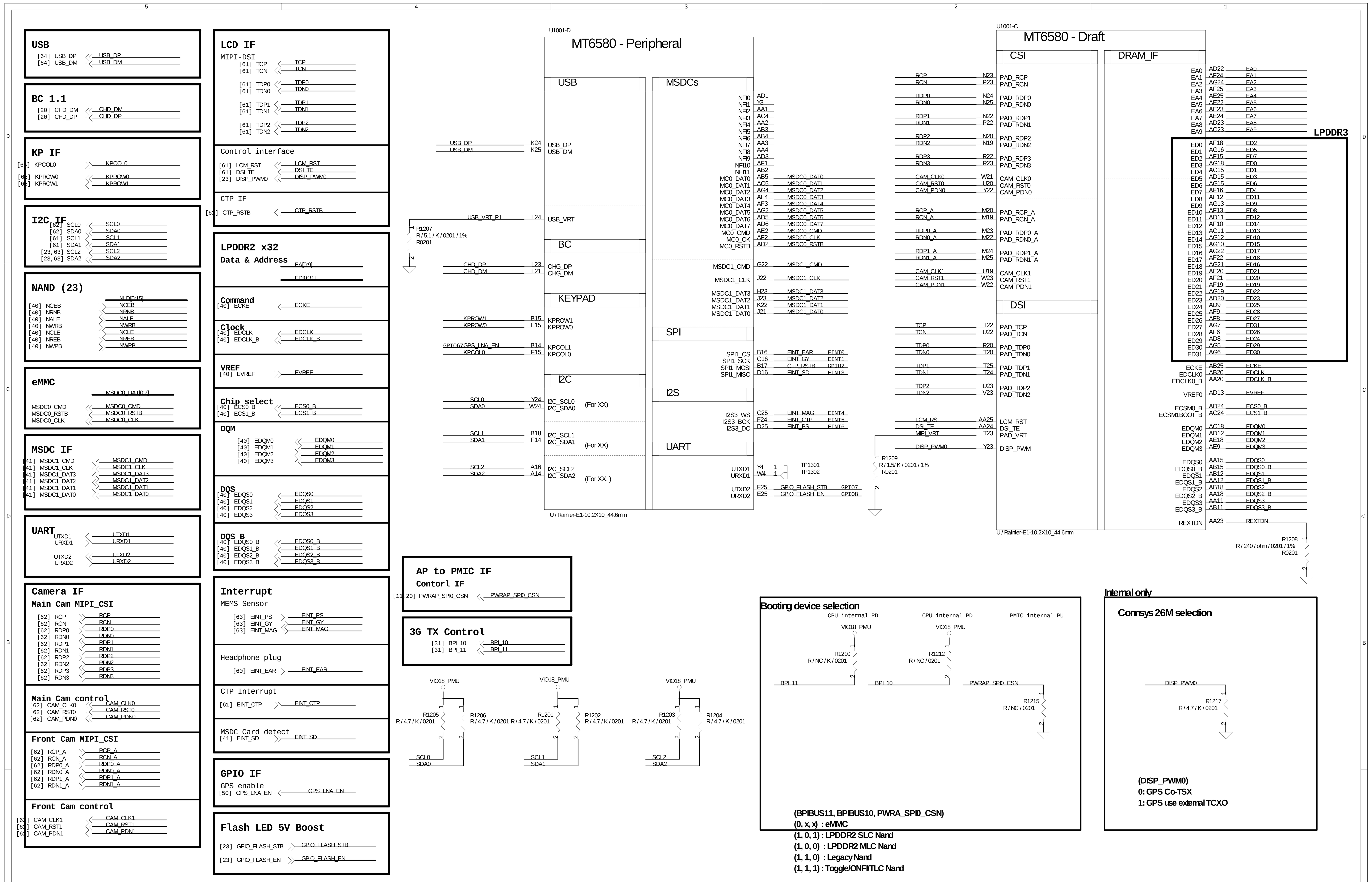

Schematic design notice of "12_BB_2" page.

Note 13-1:

Note 13-2:

Title	**12_BB_2**
Size A1	MTK Confidential
Date: Wednesday, November 19, 2014	Sheet 6 of 22

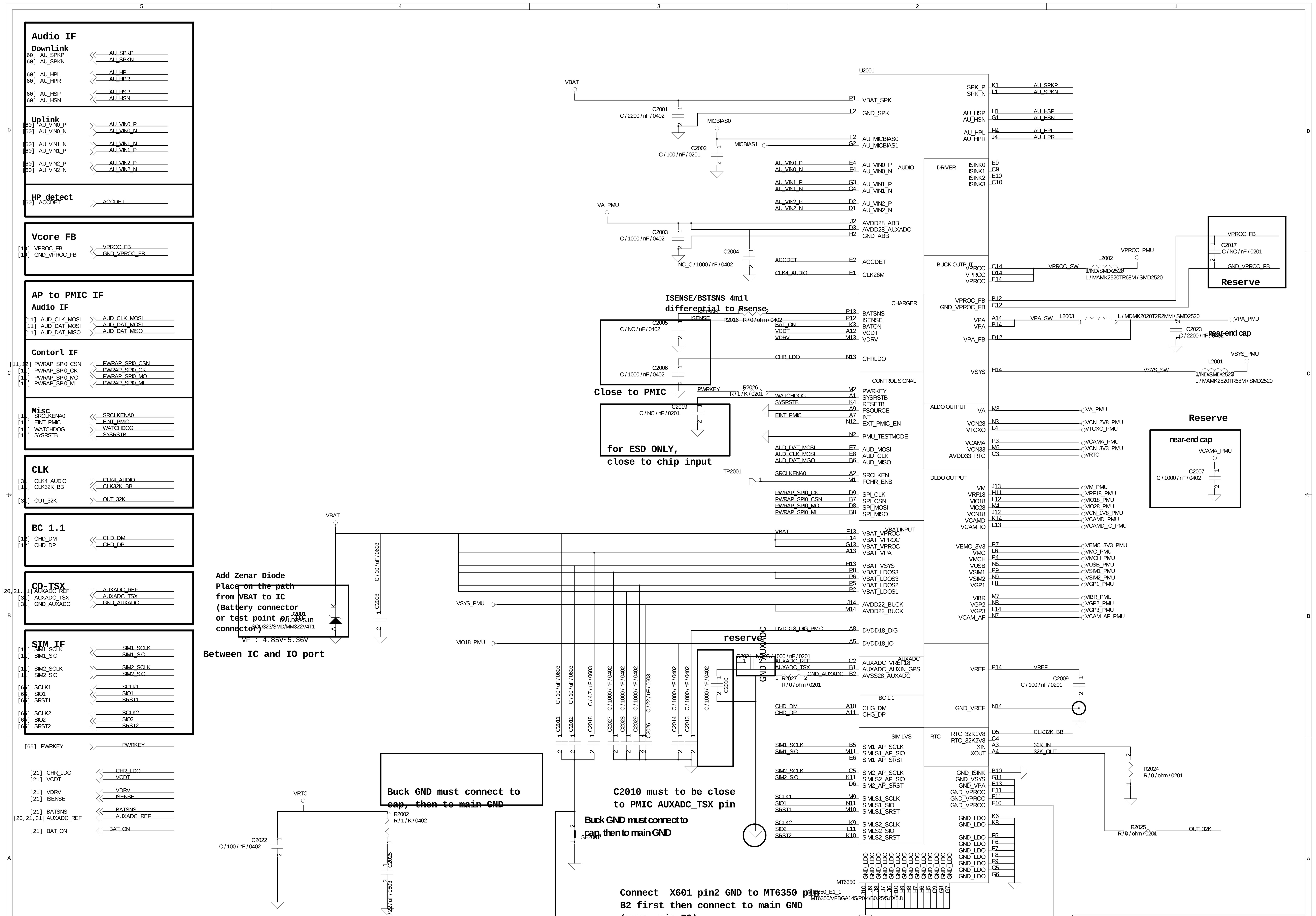

Title	20_MT6350_PMIC Core
Size A1	MTK Confidential
Date: Wednesday, November 19, 2014	Sheet 7 of 22

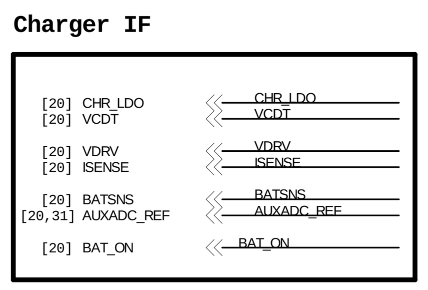

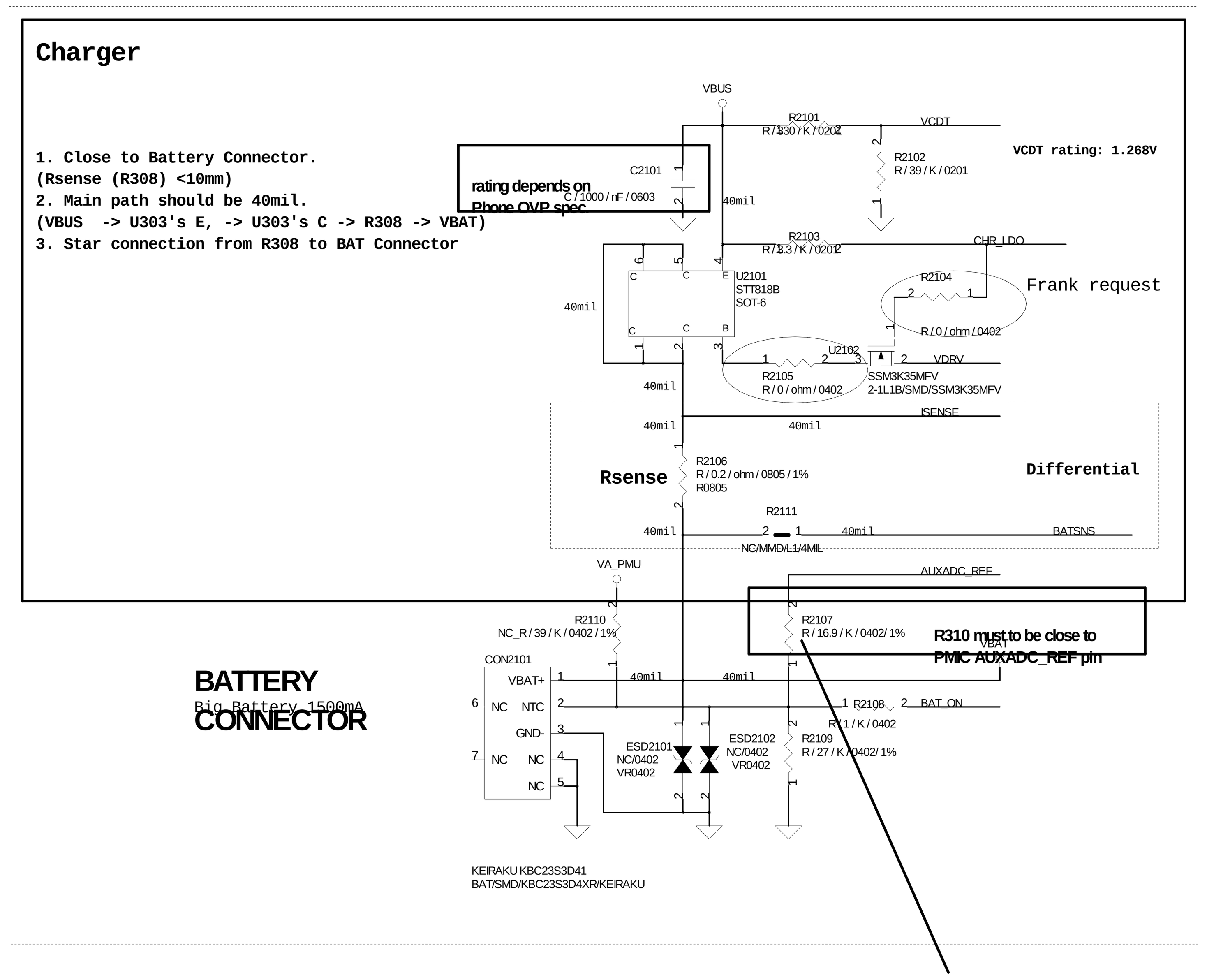

if battery NTC is 10kohm, R310=16.9K, R312=27K
if battery NTC is 47kohm, R310=61.9K, R312=100K
Refer to MT6350 HW design notice

Title **21_Charger**

Size A1 — MTK Confidential

Date: Wednesday, November 19, 2014 Sheet 8 of 22

Flash LED 5V Boost

[12] GPIO_FLASH_STB — GPIO_FLASH_STB
[12] GPIO_FLASH_EN — GPIO_FLASH_EN
[12,63] SCL2 — SCL2
[12,63] SDA2 — SDA2

LCM Backlight Driver

[61] LCM_LEDA — LCM_LEDA
[61] LCM_LEDK — LCM_LEDK
[12] DISP_PWM0 — DISP_PWM0
[61] LCM_LED_PWM — LCM_LED_PWM

Flash LED 5V Boost

Flash LED I2C address: 0X63 (Write:0xC6, Read:0xC7)

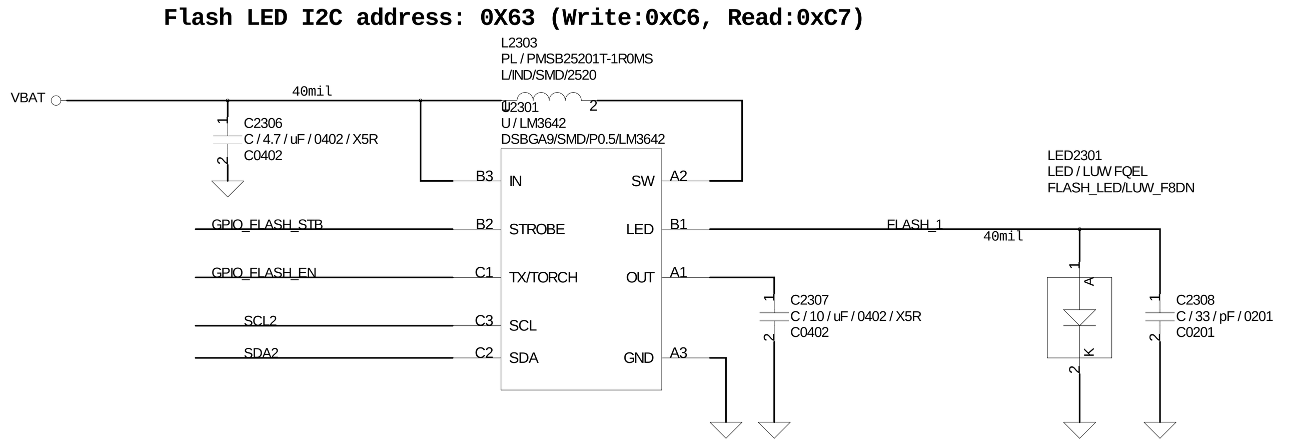

LCM Backlight LED Driver

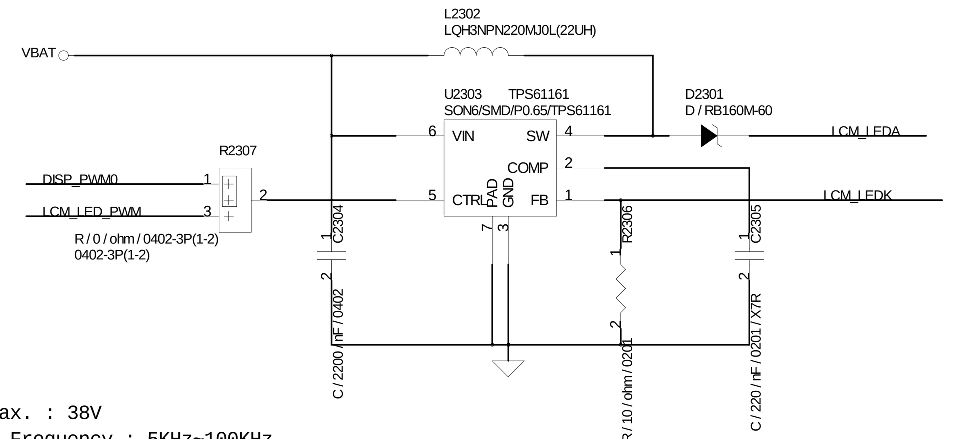

VOUT max. : 38V
Switch Frequency : 5KHz~100KHz
VFB : 200mV

Title	**23_POWER_THIRD PARTY**
Size A1	MTK Confidential
Date: Wednesday, November 19, 2014	Sheet 9 of 22

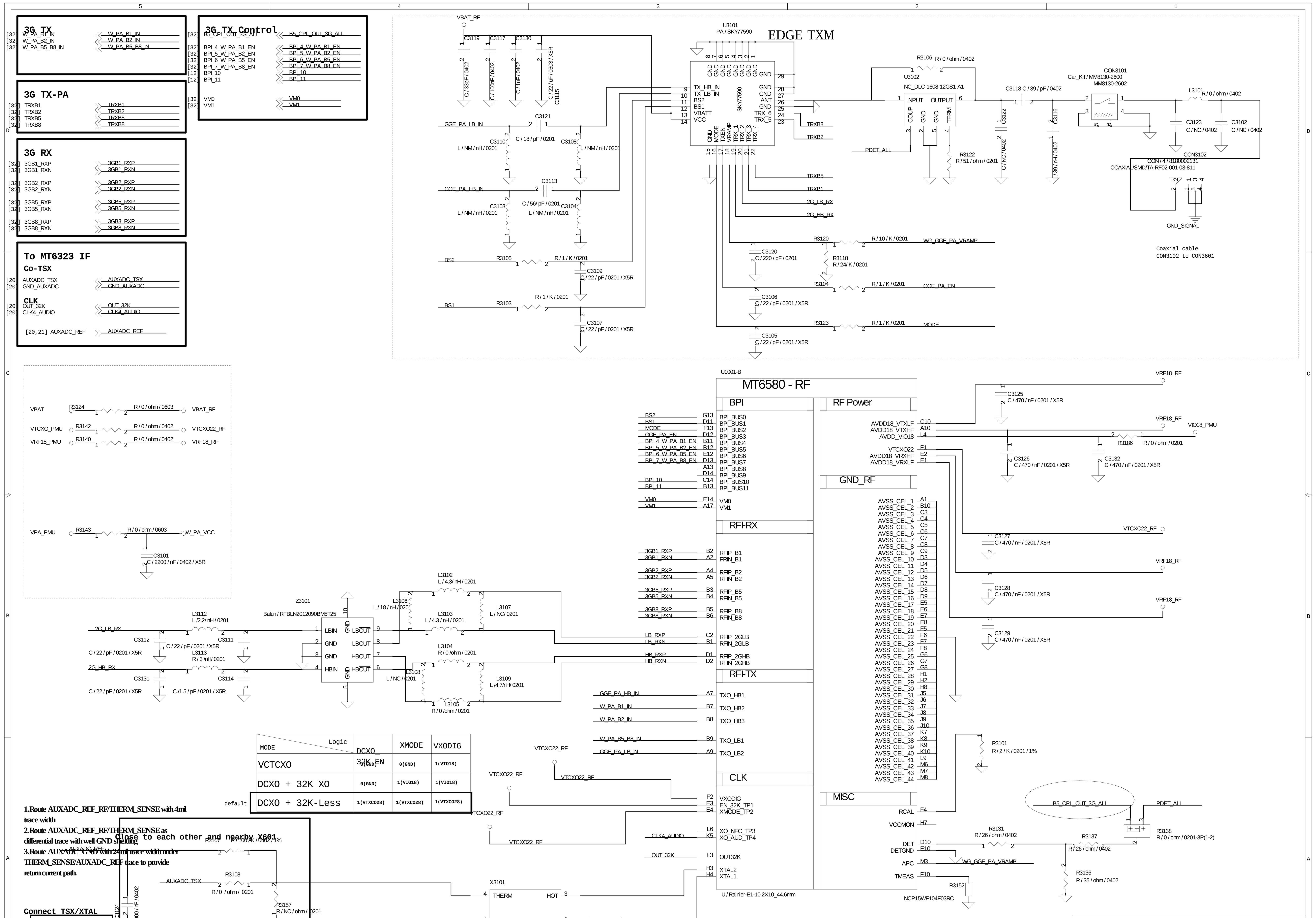

MODE \ Logic	DCXO_32K_EN	XMODE	VXODIG
VCTCXO	0(GND)	0(GND)	1(VIO18)
DCXO + 32K XO	0(GND)	1(VIO18)	1(VIO18)
default: DCXO + 32K-Less	1(VTXCO28)	1(VTXCO28)	1(VTXCO28)

1.Route AUXADC_REF_RF/THERM_SENSE with 4mil trace width
2.Route AUXADC_REF_RF/THERM_SENSE as differential trace with well GND shielding
3.Route AUXADC_GND with 24mil trace width under THERM_SENSE/AUXADC_REF trace to provide return current path.

Connect TSX/XTAL GND to AVSS28 AUXADC first than connect to main GND

Title	31_RF_TXM_2G
Size A1	MTK Confidential
Date: Wednesday, November 19, 2014	Sheet 10 of 22

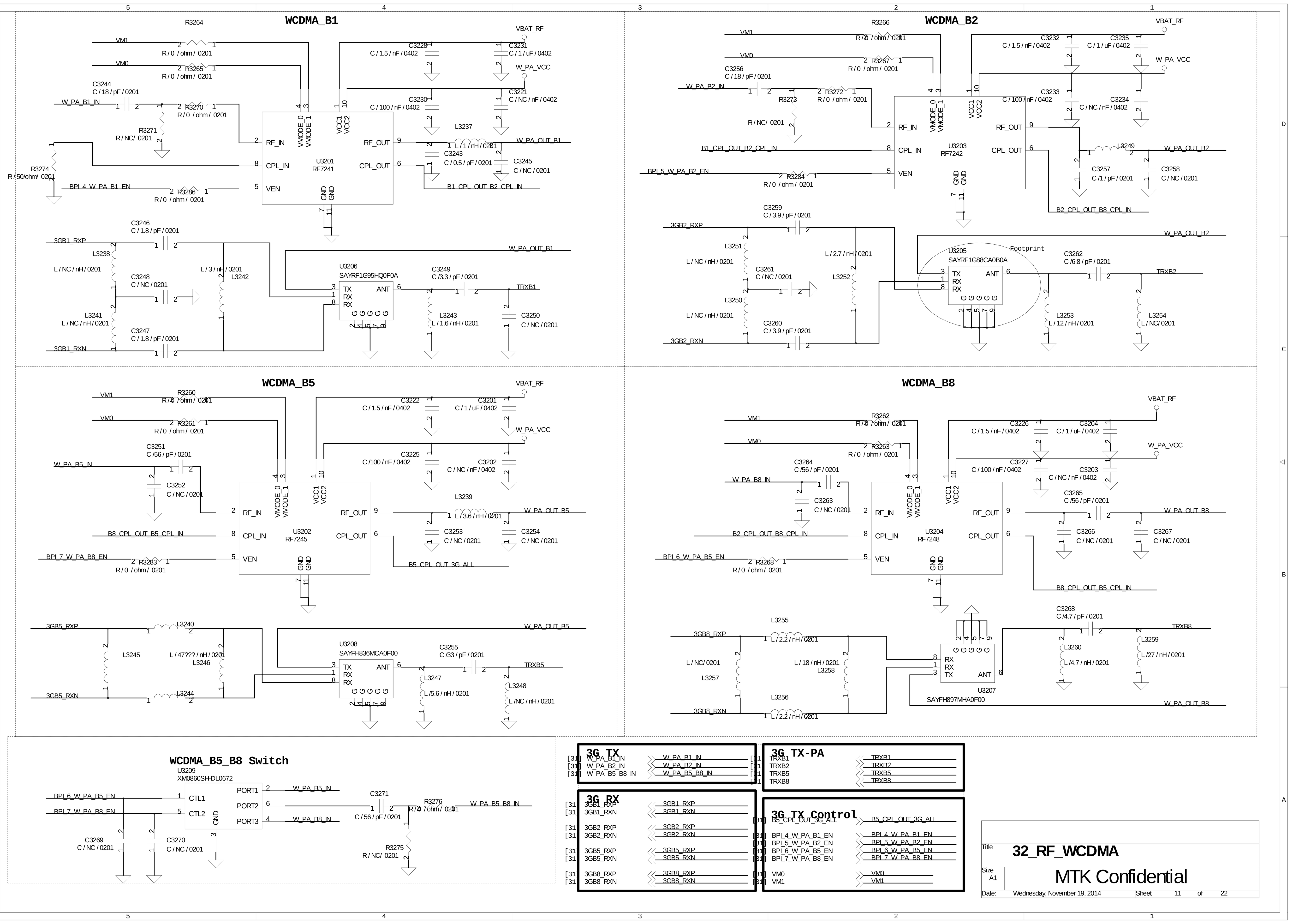
WCDMA_B1
WCDMA_B2
WCDMA_B5
WCDMA_B8
WCDMA_B5_B8 Switch
3G TX
3G TX-PA
3G RX
3G TX Control
Title
32_RF_WCDMA
Size
A1
MTK Confidential
Date
Wednesday, November 19, 2014
Sheet
11
of
22

Main Antenna

Hybrid ANT for ref circuit?

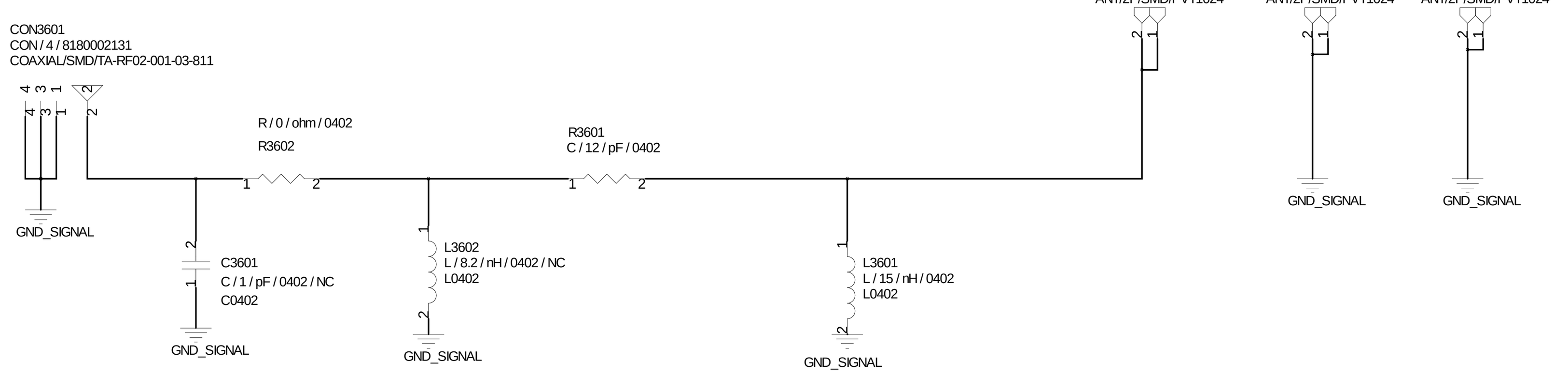

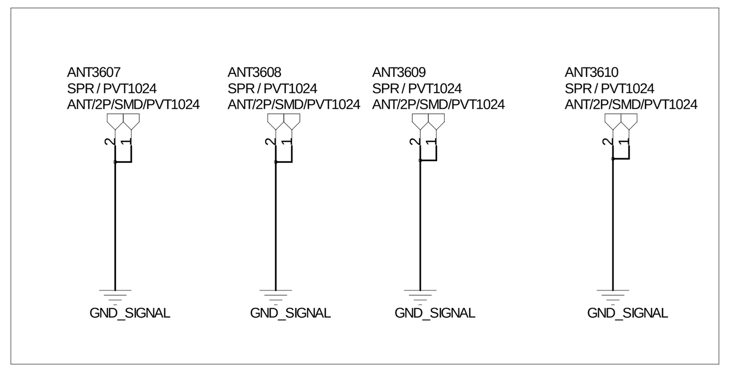

Title	36_RF_AT
Size A1	MTK Confidential
Date: Wednesday, November 19, 2014	Sheet 12 of 22

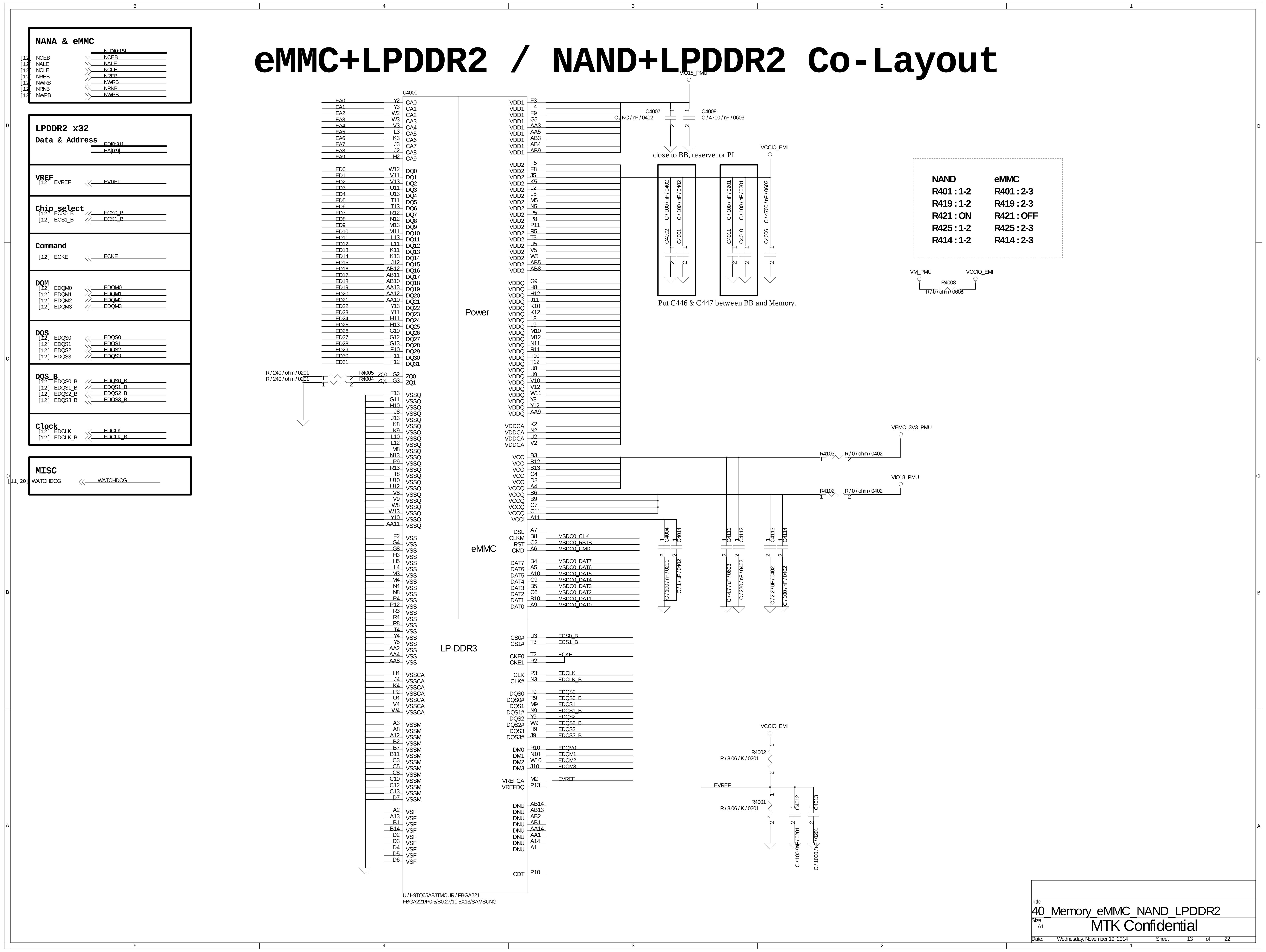

eMMC+LPDDR2 / NAND+LPDDR2 Co-Layout
NANA & eMMC
LPDDR2 x32
Data & Address
VREF
Chip select
Command
DQM
DQS
DQS_B
Clock
MISC
U4001
Power
eMMC
LP-DDR3
close to BB, reserve for PI
Put C446 & C447 between BB and Memory.
NAND
R401 : 1-2
R419 : 1-2
R421 : ON
R425 : 1-2
R414 : 1-2
eMMC
R401 : 2-3
R419 : 2-3
R421 : OFF
R425 : 2-3
R414 : 2-3
Title
40_Memory_eMMC_NAND_LPDDR2
Size
A1
MTK Confidential
Date: Wednesday, November 19, 2014
Sheet 13 of 22

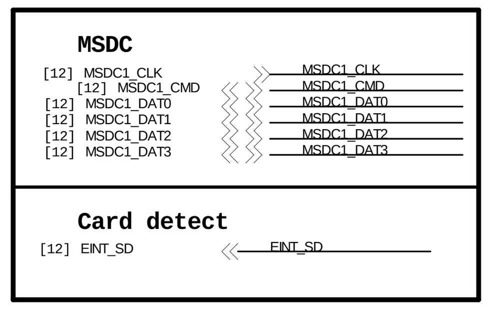

SD CARD

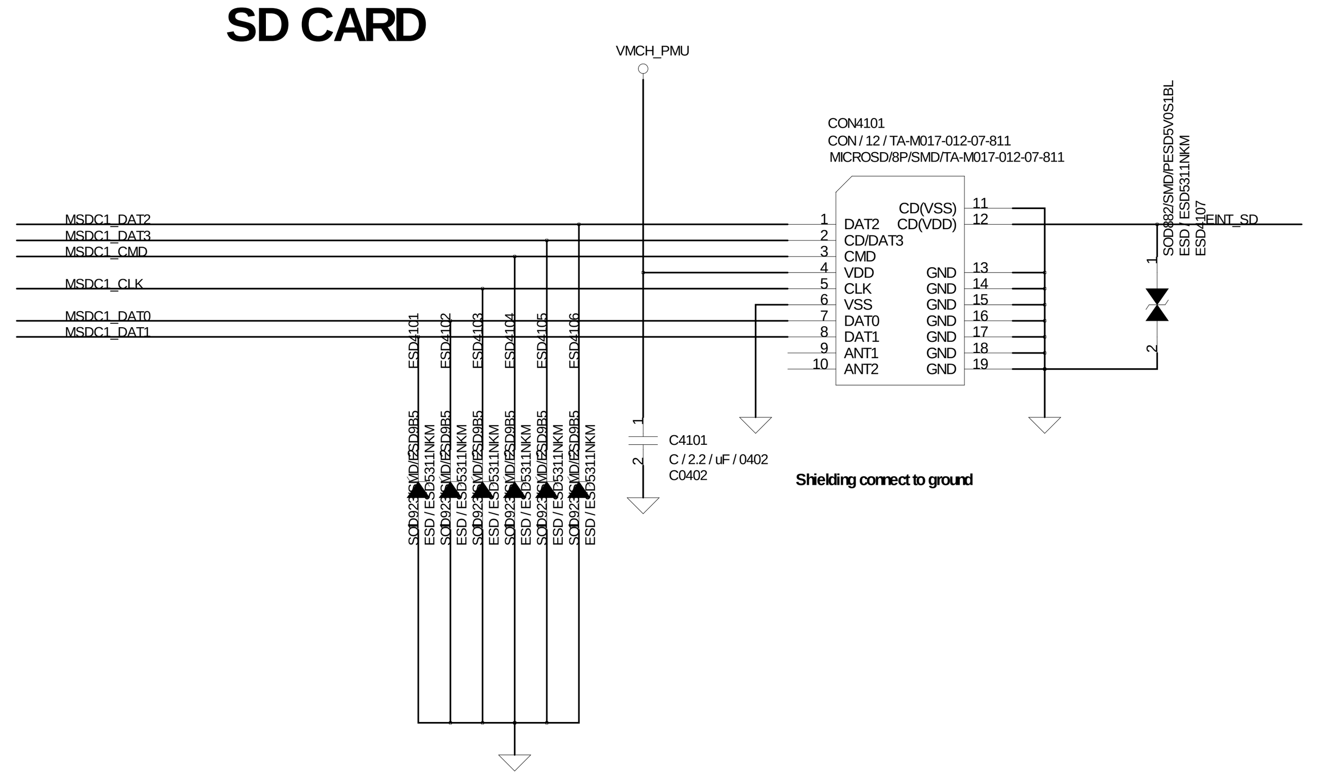

Schematic design notice of "41_MEMORY_SD Card" page.

Note 41-1:
The equivalent capacitance of ESD protection device must be <=1pF
-- otherwise it will result in NFC card mode function fail.

Note 41-2:
Depends on system design to add ESD protection componemt or not.

Title	41_MEMORY_SD Card
Size A1	MTK Confidential
Date:	Wednesday, November 19, 2014 — Sheet 14 of 22

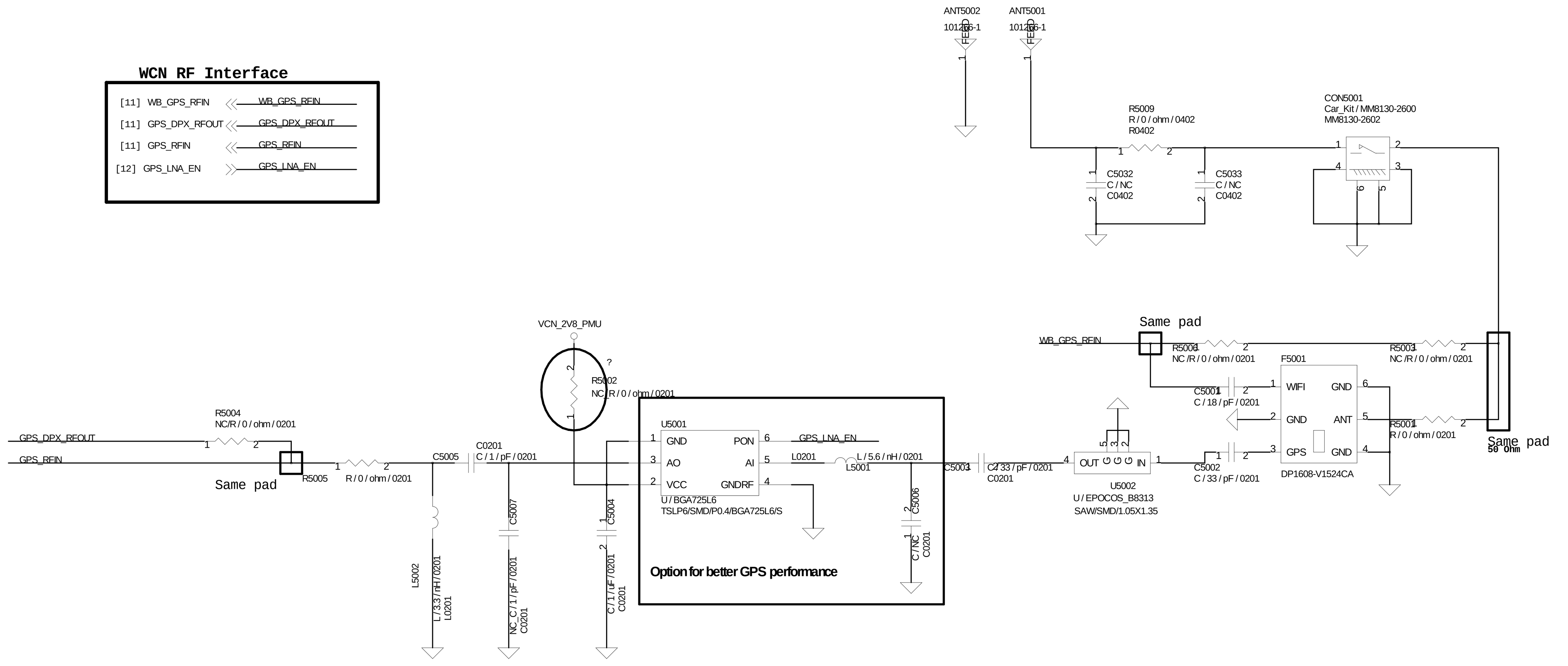

Title	**50_BT_FM_GPS_WiFi**
Size A1	MTK Confidential
Date: Wednesday, November 19, 2014	Sheet 15 of 22

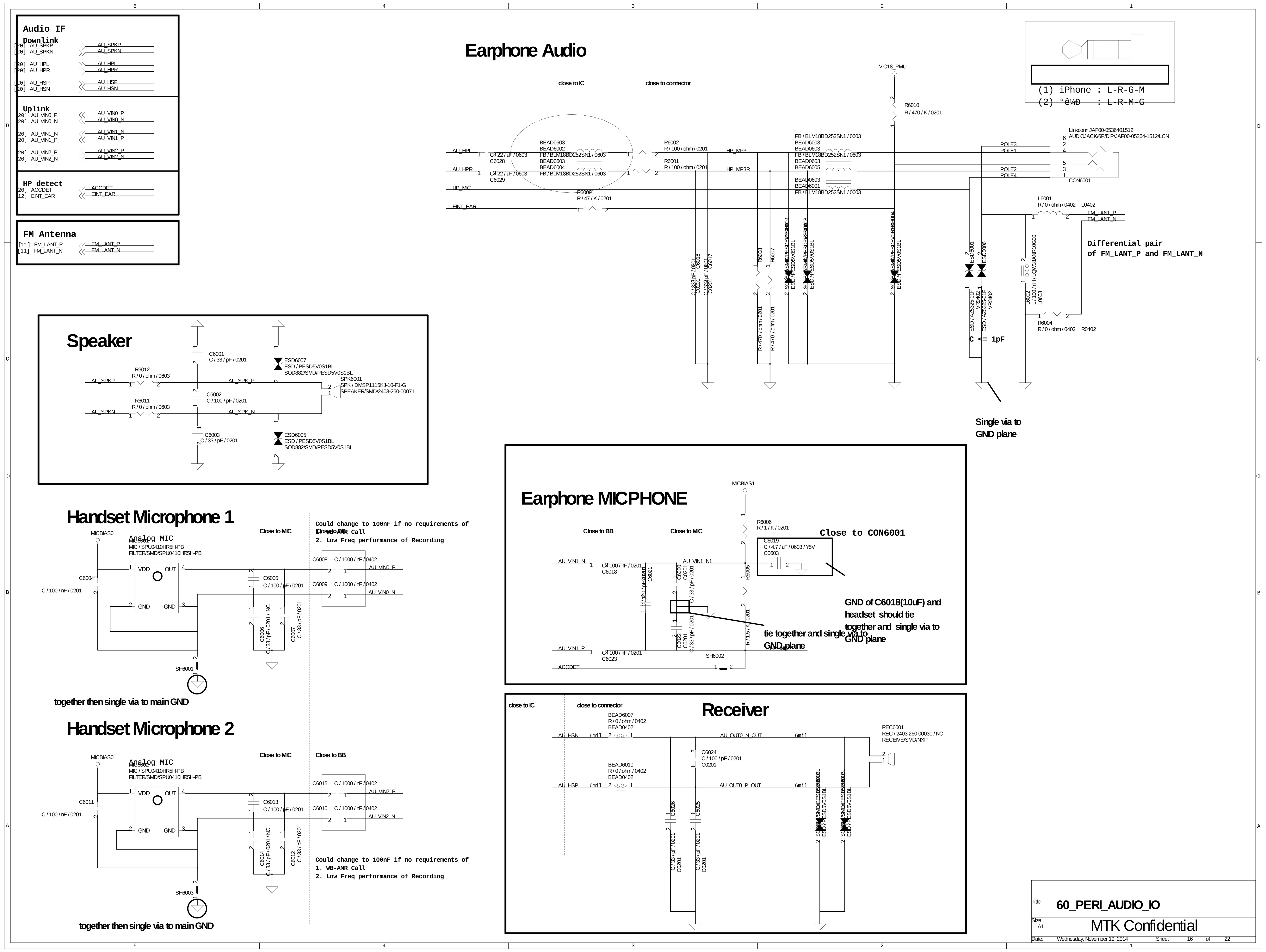
Audio IF
Downlink
Uplink
HP detect
FM Antenna
Earphone Audio
close to IC
close to connector
VIO18_PMU
(1) iPhone : L-R-G-M
Differential pair
of FM_LANT_P and FM_LANT_N
C <= 1pF
Single via to
GND plane
Speaker
Earphone MICPHONE
MICBIAS1
Close to BB
Close to MIC
Close to CON6001
GND of C6018(10uF) and
headset should tie
together and single via to
GND plane
tie together and single via to
GND plane
Handset Microphone 1
Analog MIC
Could change to 100nF if no requirements of
1. WB-AMR Call
2. Low Freq performance of Recording
together then single via to main GND
Handset Microphone 2
Receiver
60_PERI_AUDIO_IO
MTK Confidential
Wednesday, November 19, 2014
Sheet 16 of 22

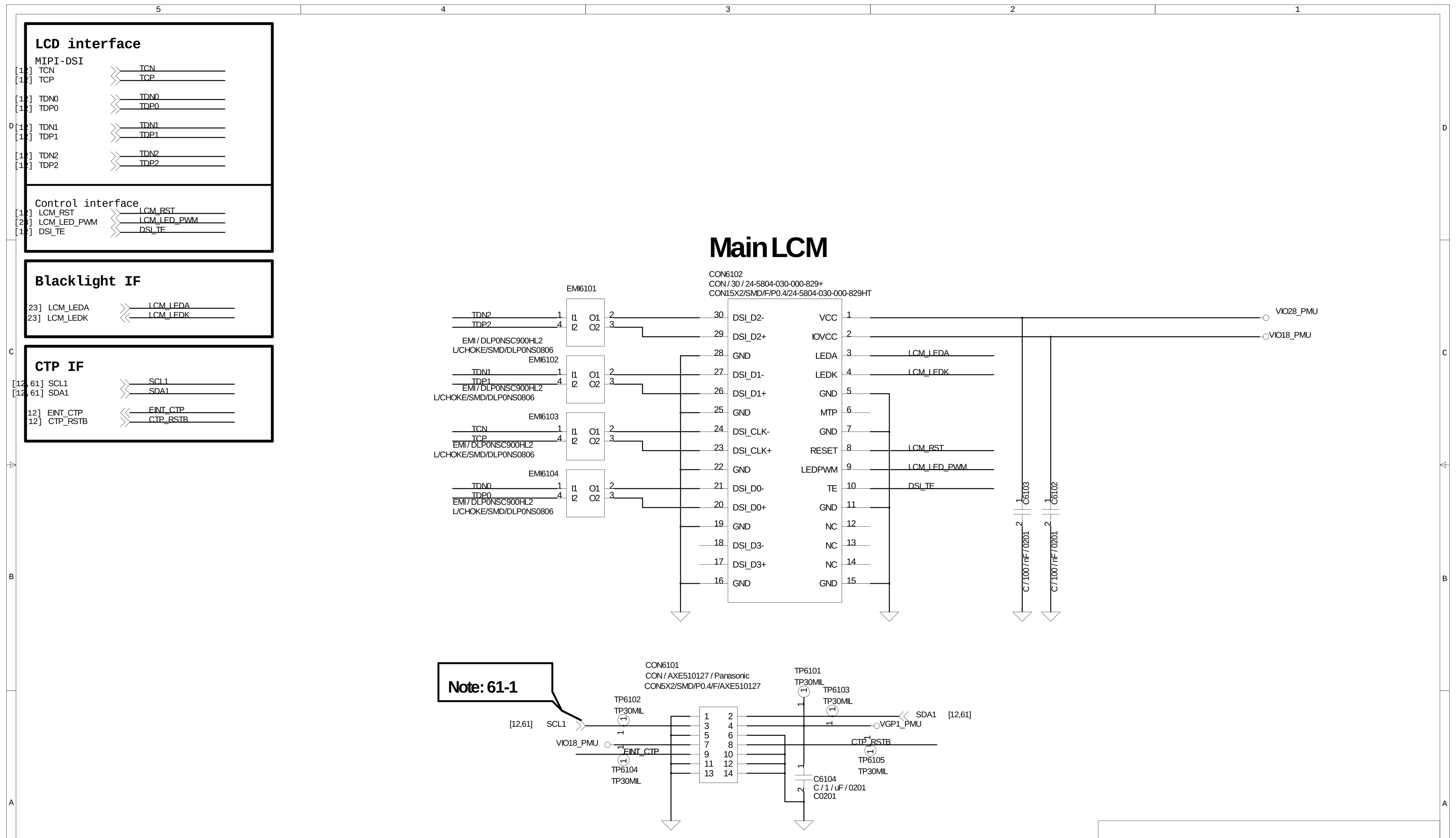

Title	61_PERI_LCD_CTP		
Size A1	MTK Confidential		
Date:	Wednesday, November 19, 2014	Sheet 17	of 22

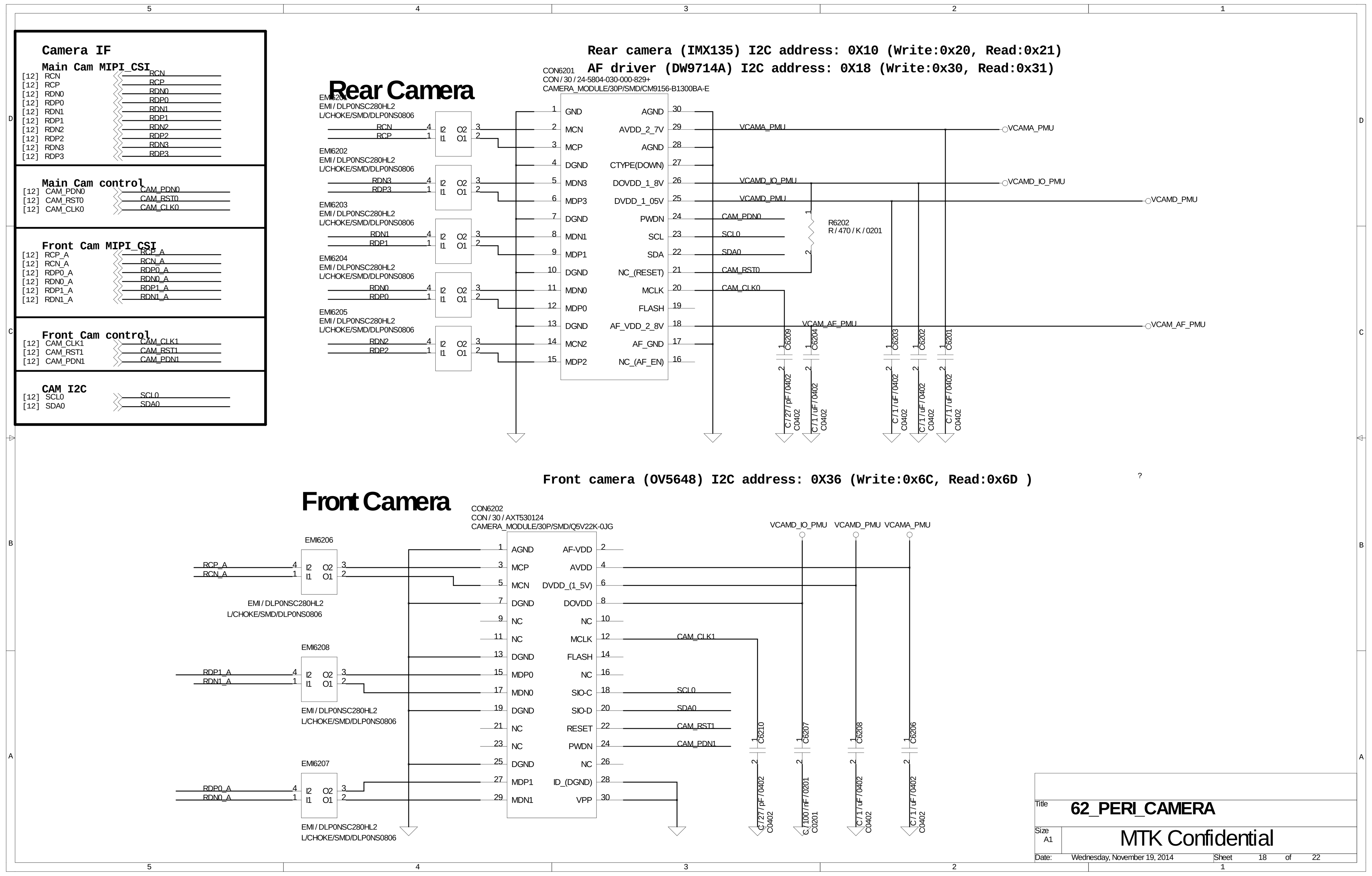
Camera IF
Main Cam MIPI_CSI
Main Cam control
Front Cam MIPI_CSI
Front Cam control
CAM I2C
Rear Camera
Rear camera (IMX135) I2C address: 0X10 (Write:0x20, Read:0x21)
AF driver (DW9714A) I2C address: 0X18 (Write:0x30, Read:0x31)
CON6201
CON / 30 / 24-5804-030-000-829+
CAMERA_MODULE/30P/SMD/CM9156-B1300BA-E
VCAMA_PMU
VCAMD_IO_PMU
VCAMD_PMU
VCAM_AF_PMU
R6202
R / 470 / K / 0201
Front camera (OV5648) I2C address: 0X36 (Write:0x6C, Read:0x6D)
Front Camera
CON6202
CON / 30 / AXT530124
CAMERA_MODULE/30P/SMD/Q5V22K-0JG
EMI / DLP0NSC280HL2
L/CHOKE/SMD/DLP0NS0806
Title
62_PERI_CAMERA
Size
A1
MTK Confidential
Date
Wednesday, November 19, 2014
Sheet
18
of
22

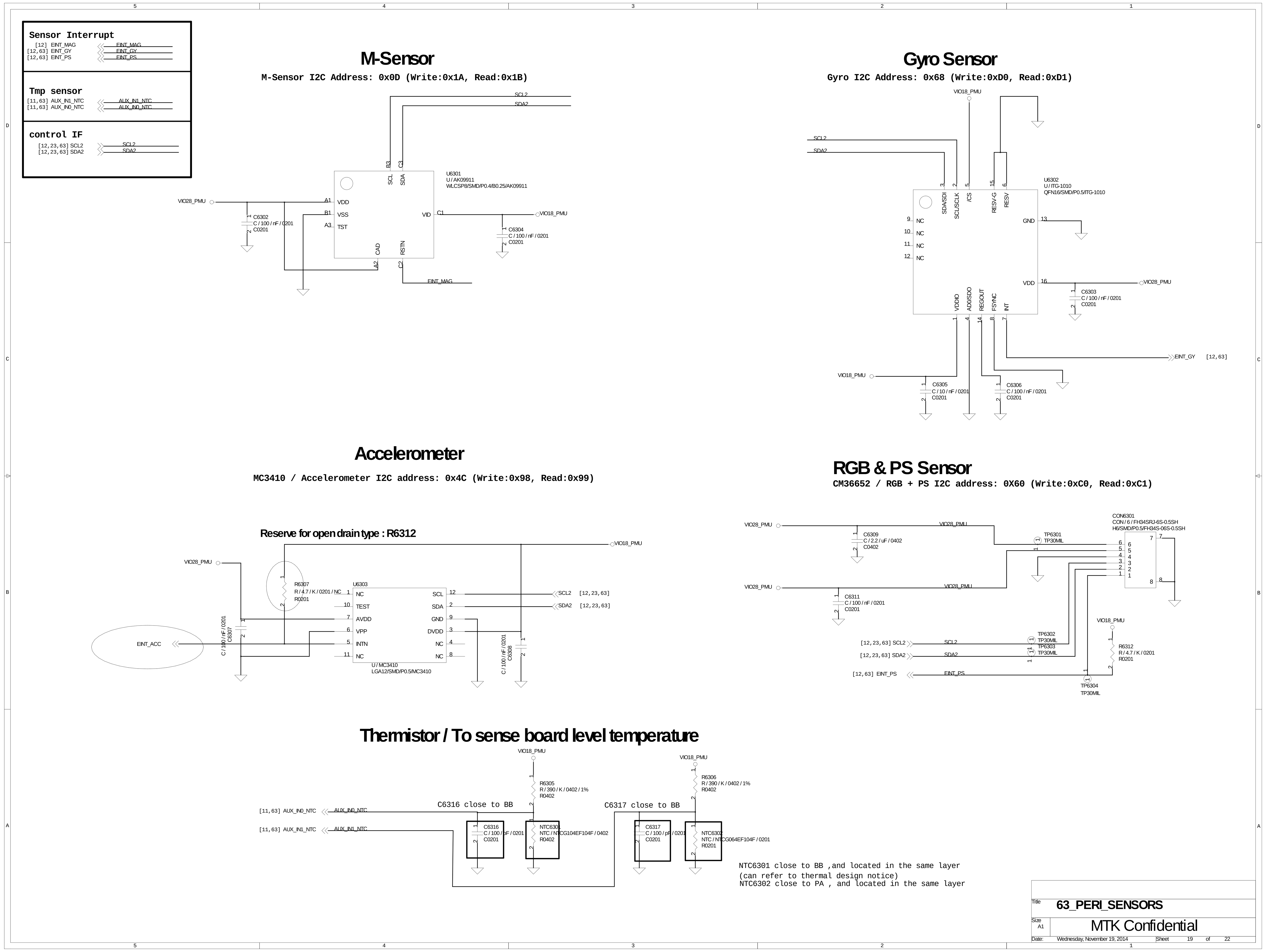
Sensor Interrupt
[12] EINT_MAG
[12,63] EINT_GY
[12,63] EINT_PS
Tmp sensor
[11,63] AUX_IN1_NTC
[11,63] AUX_IN0_NTC
control IF
[12,23,63] SCL2
[12,23,63] SDA2
M-Sensor
M-Sensor I2C Address: 0x0D (Write:0x1A, Read:0x1B)
U6301
U / AK09911
WLCSP8/SMD/P0.4/B0.25/AK09911
VIO28_PMU
VIO18_PMU
C6302
C / 100 / nF / 0201
C0201
C6304
C / 100 / nF / 0201
C0201
EINT_MAG
Gyro Sensor
Gyro I2C Address: 0x68 (Write:0xD0, Read:0xD1)
U6302
U / ITG-1010
QFN16/SMD/P0.5/ITG-1010
C6303
C / 100 / nF / 0201
C0201
C6305
C / 10 / nF / 0201
C0201
C6306
C / 100 / nF / 0201
C0201
EINT_GY [12,63]
Accelerometer
MC3410 / Accelerometer I2C address: 0x4C (Write:0x98, Read:0x99)
Reserve for open drain type : R6312
R6307
R / 4.7 / K / 0201 / NC
R0201
U6303
U / MC3410
LGA12/SMD/P0.5/MC3410
EINT_ACC
SCL2 [12,23,63]
SDA2 [12,23,63]
RGB & PS Sensor
CM36652 / RGB + PS I2C address: 0X60 (Write:0xC0, Read:0xC1)
CON6301
CON / 6 / FH34SRJ-6S-0.5SH
H6/SMD/P0.5/FH34S-06S-0.5SH
C6309
C / 2.2 / uF / 0402
C0402
C6311
C / 100 / nF / 0201
C0201
TP6301
TP6302
TP6303
TP6304
TP30MIL
R6312
R / 4.7 / K / 0201
R0201
[12,23,63] SCL2
[12,23,63] SDA2
[12,63] EINT_PS
Thermistor / To sense board level temperature
R6305
R / 390 / K / 0402 / 1%
R0402
R6306
R / 390 / K / 0402 / 1%
R0402
C6316 close to BB
C6317 close to BB
[11,63] AUX_IN0_NTC
[11,63] AUX_IN1_NTC
C6316
C / 100 / pF / 0201
C0201
NTC6301
NTC / NTCG104EF104F / 0402
R0402
C6317
C / 100 / pF / 0201
C0201
NTC6302
NTC / NTCG064EF104F / 0201
R0201
NTC6301 close to BB ,and located in the same layer
(can refer to thermal design notice)
NTC6302 close to PA , and located in the same layer
Title
63_PERI_SENSORS
Size
A1
MTK Confidential
Date: Wednesday, November 19, 2014
Sheet 19 of 22

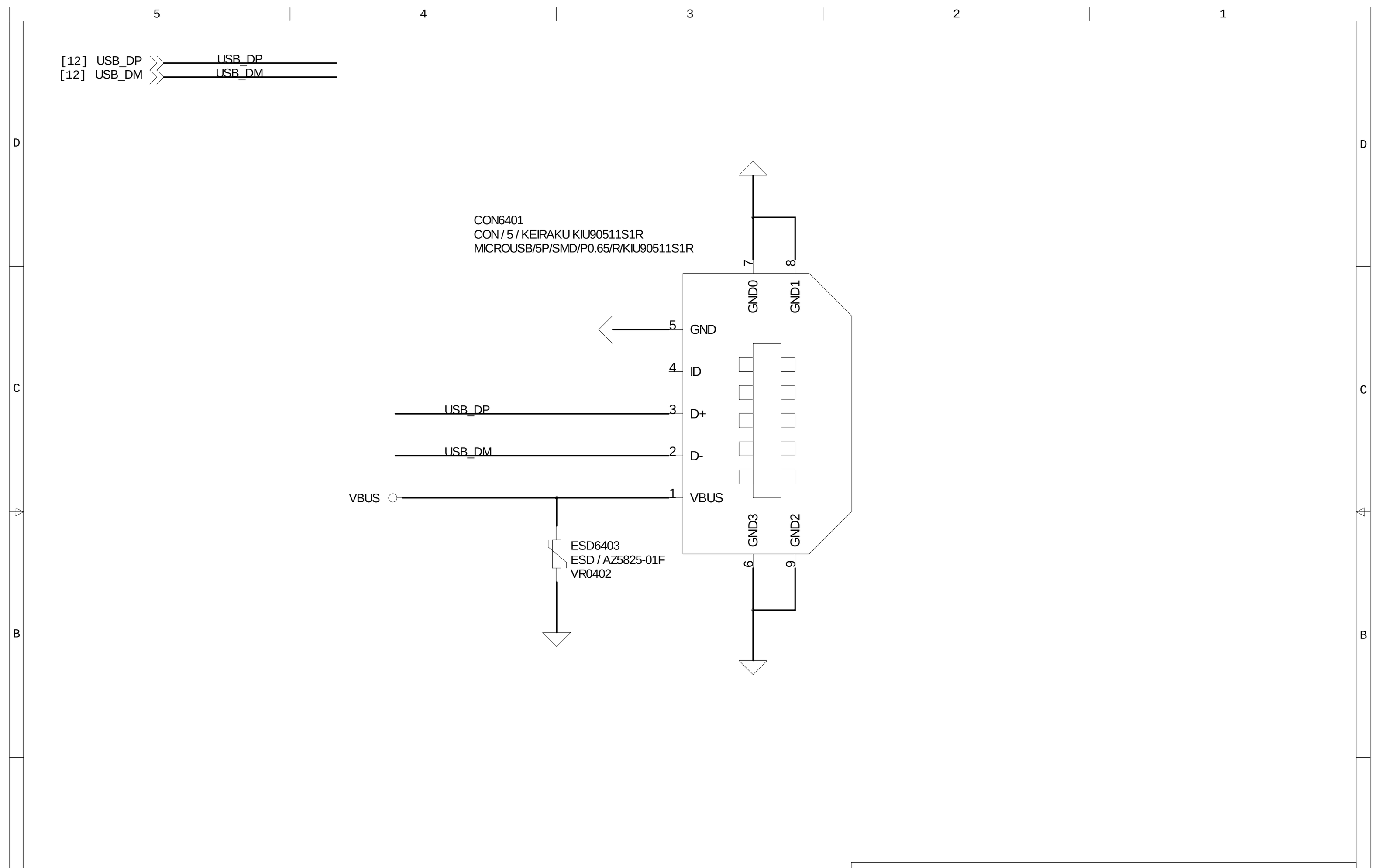

Title	**64_PERI_USB_MHL**
Size A1	MTK Confidential
Date: Wednesday, November 19, 2014	Sheet 20 of 22

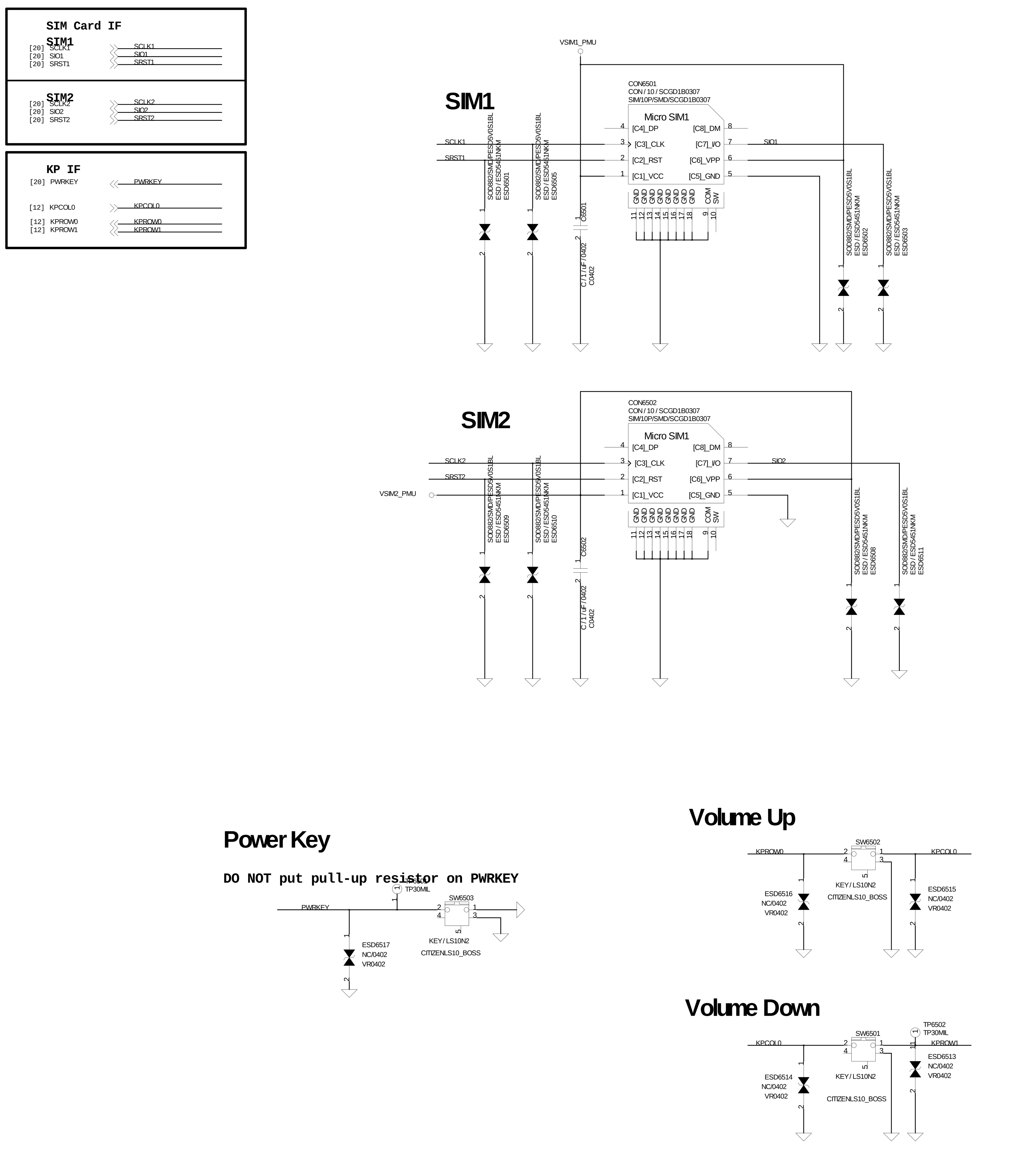

	KCOL0	KCOL0_R	KCOL1	KCOL1_R	KCOL2	KCOL2_R
KROW0	Up					
KROW1	Down					
KROW2	Send (debug)	Reserve1 (debug)			End (debug)	Reserve2 (debug)

Title **65_PERI_Dual_SIM_ICUSB_KEYPAD**

Size A1

MTK Confidential

Date: Wednesday, November 19, 2014 Sheet 21 of 22

VIBRATOR

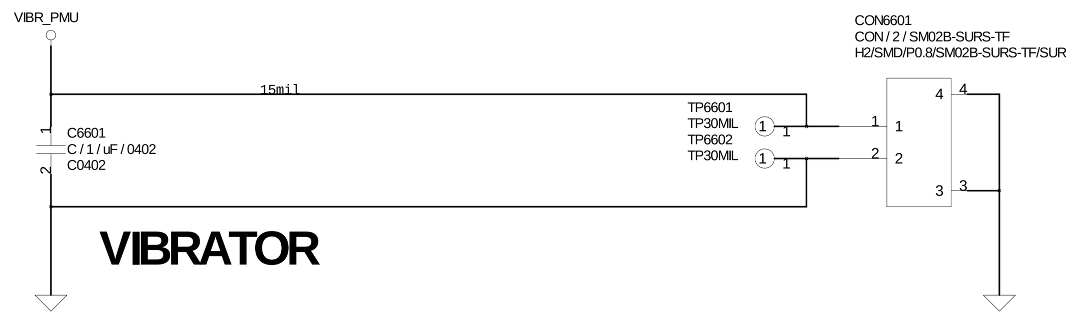

Title	**66_PERI_VIBRATOR**
Size A1	MTK Confidential
Date: Wednesday, November 19, 2014	Sheet 22 of 22